YLI ELECTRONIC

Door Loop for Mortise Mounting

Model: DLK-402/402SS/402L

Basic Instruction

Door loop is made of excellent material, Seiko quality, Special design, Applicable to use foraccess control, to protect the wire when install the electric lock, magnetic contact, alarm button on the door, convenient and beautiful.

Specification

DLK-402

Si e: 290Lx24.4Wx12H(mm)DIA
Suitable Range: Prevent the wire from malicious damage
Standard Structure: Alloy Materail, Thickened Ripple Tube
Finished for Shell: Painted by high temperature
Weight: 0.27kg

DLK-402SS

Si e: 300Lx24Wx13H(mm)DIA
Suitable Range: Prevent the wire from malicious damage
Standard Structure: Alloy Materail, Thickened Ripple Tube
Finished for Shell: Painted by high temperature
Weight: 0.3kg

DLK-402L

Si e: 542Lx24Wx17H(mm)DIA
Suitable Range: Prevent the wire from malicious damage
Standard Structure: Alloy Materail, Thickened Ripple Tube
Finished for Shell: Painted by high temperature
Weight: 0.4kg

Dimension

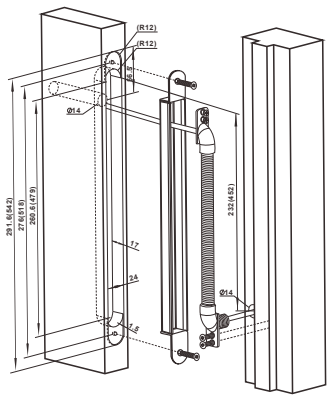

DLK-402/(DLK-402L)

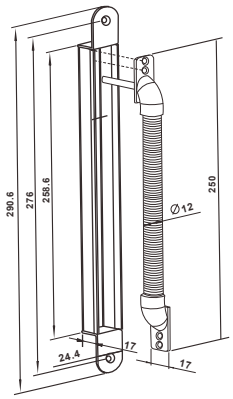

DLK-402

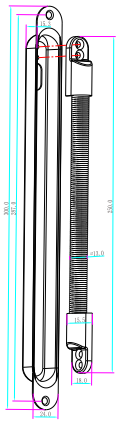

DLK-402SS

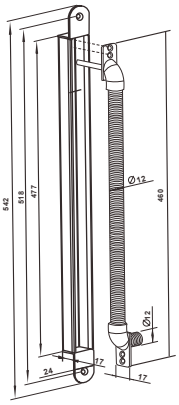

DLK-402L

Installation

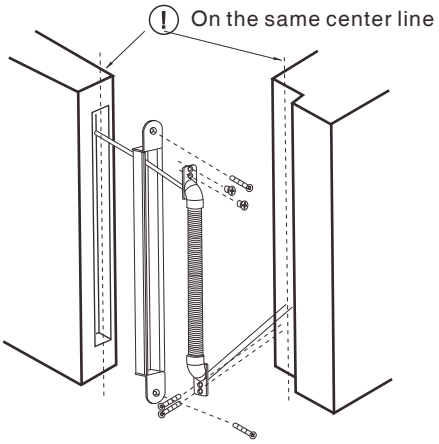

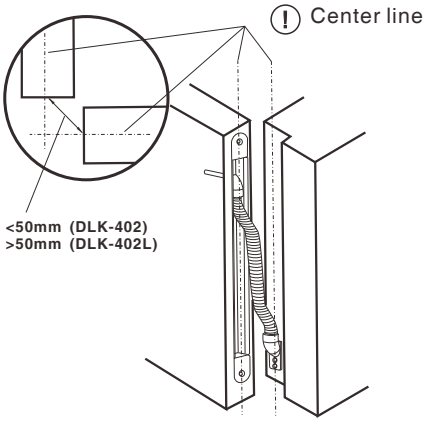

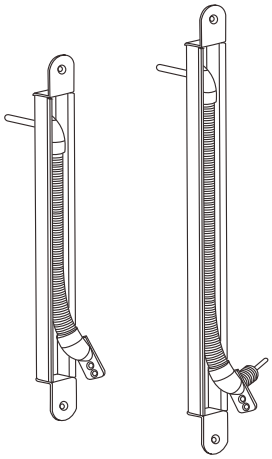

DLK-402,DLK-402L